①

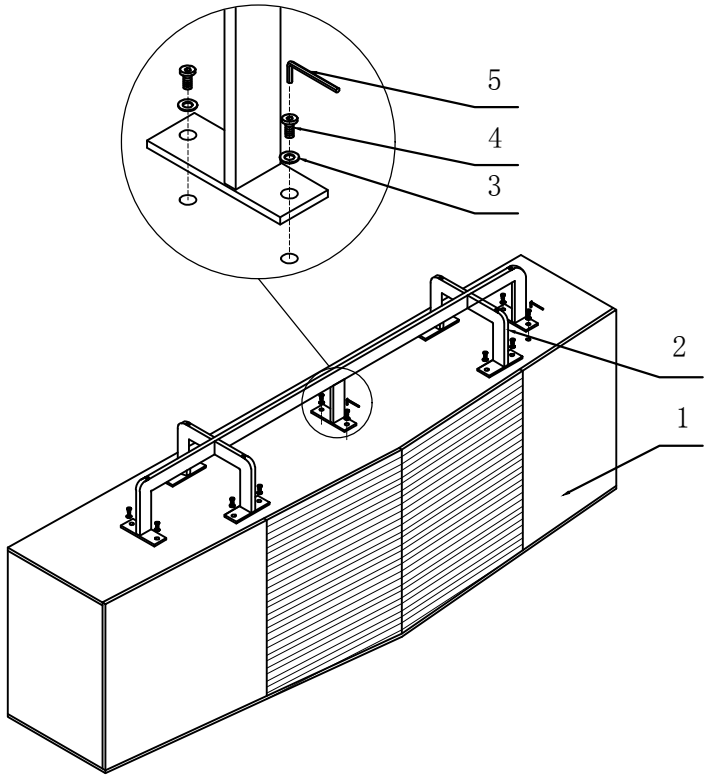

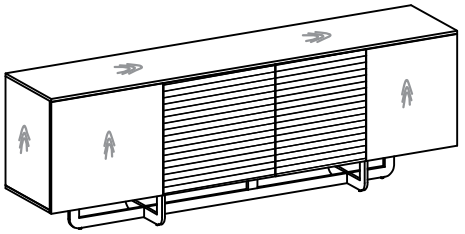

ASSEMBLING INSTRUCTION

②

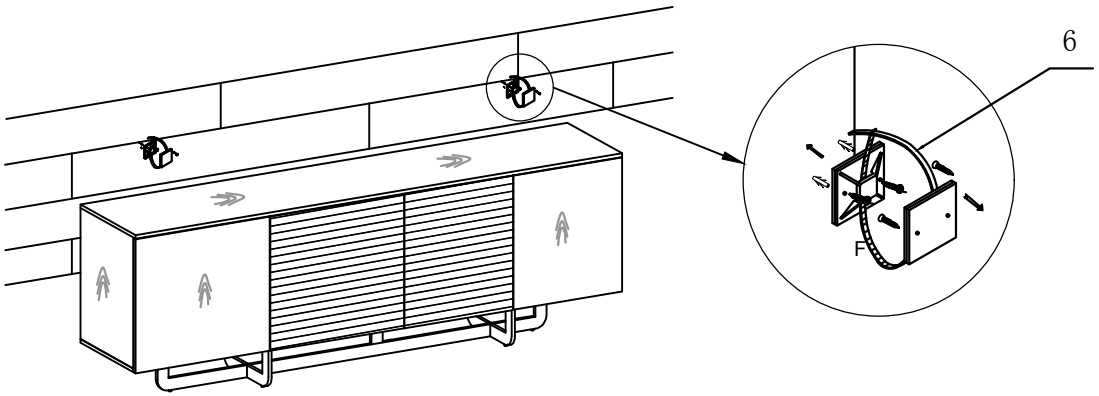

Number	Description	Measurement	Pieces
6			2Set
5		4MM	1
4		M6x16	14
3		φ13-φ6.5*1.2	14
2	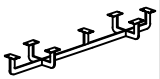	1770x380x180	1
1	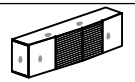	2200x450x620	1
Model	SB14803A-2625	3-29	